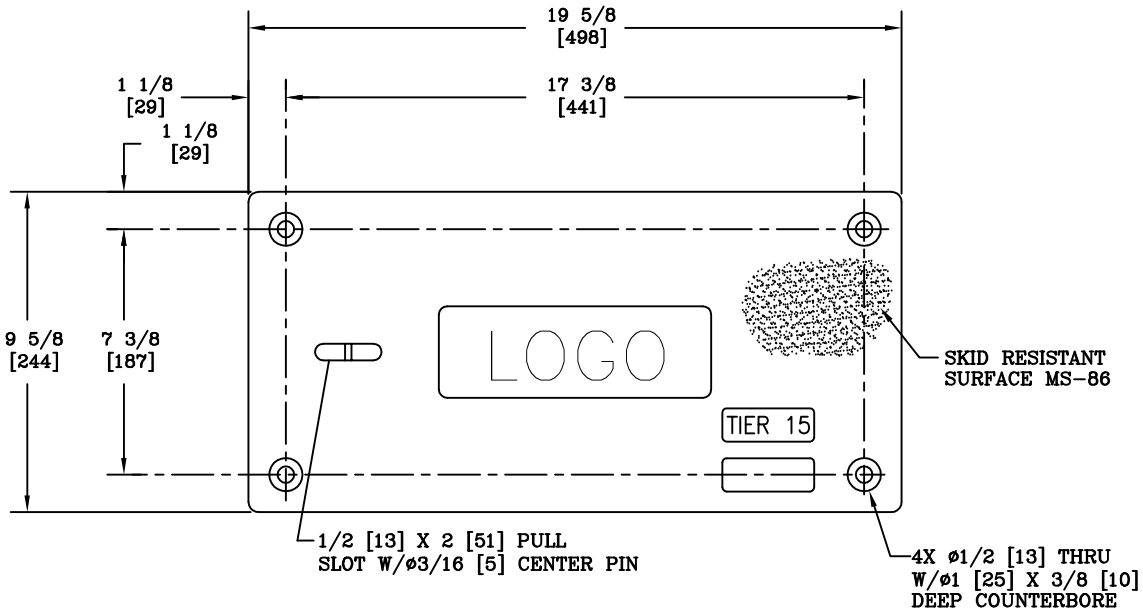

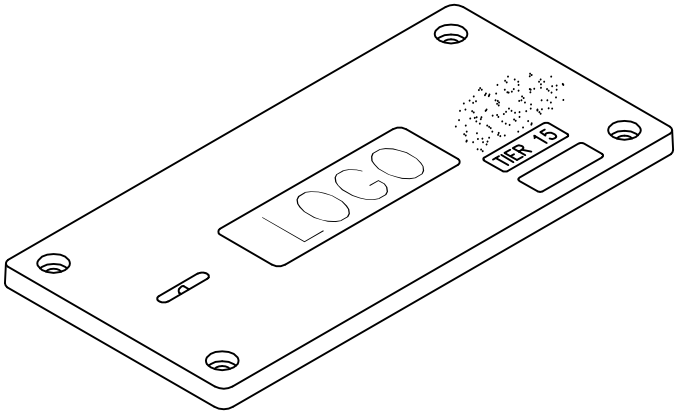

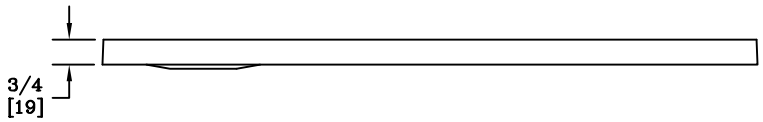

NOTES:

1. LOGO TO BE SPECIFIED: _____
2. FURNISHED W/ (4) 3/8-7 X 2 [51] LG. S.S. HEX HD. BOLTS AND 3/8 [10] FLAT WASHERS.
3. THIS COVER IS RATED FOR A STATIC DESIGN LOAD OF 15,000 LBS. [66,720 N] OVER A 10 [254] X 10 [254] AREA AND MUST PASS A MIN. STATIC TEST LOAD OF 22,500 LBS. [100,085 N]
4. DIMENSIONS IN BRACKETS ARE IN MILLIMETERS UNLESS OTHERWISE NOTED.

UL LISTED

DIMENSIONS ARE IN INCHES OR MILLIMETERS IN BRACKETS UNLESS OTHERWISE NOTED.

	BY	DATE	WEIGHT			LOC
DRN	JMW	7/10/00	11# 5kg	HUBBELL® 362 INDUSTRIAL PARK DR LENOIR CITY, TN 37771 800-346-3062 www.quazite.com		S
CHK	WRT	7/13/00	SCALE 3"=1'	DRAWING DESCRIPTION: QUAZITE® COVER		REV. C
ENG	JJF	7/31/00				
APR			SIZE B			3/12
APR						
ESR OR PROJECT NUMBER 00481				SHEET 1 OF 1	DRAWING NUMBER PC0818HA00	